ART.NR: 1514

WEIGHT BENCH
ASSEMBLY INSTRUCTION
PART LIST
01. x 4
M10*70bolt,washer,nut
02. x 3
M10*60bolt,washer,nut
03. x 1
M10*50bolt,washer,nut
04. x 1
M10*20 bolt,washer
05. x 2
M10*60 knob
ASSEMBLY STEP 1.
PART LIST
06. x 4
M8*40 bolt,washer
07. x 4
M8*20 bolt,washer
08. x 4
FOAM
09. x 1
M10*65bolt,washer,nut
ASSEMBLY STEP 2.

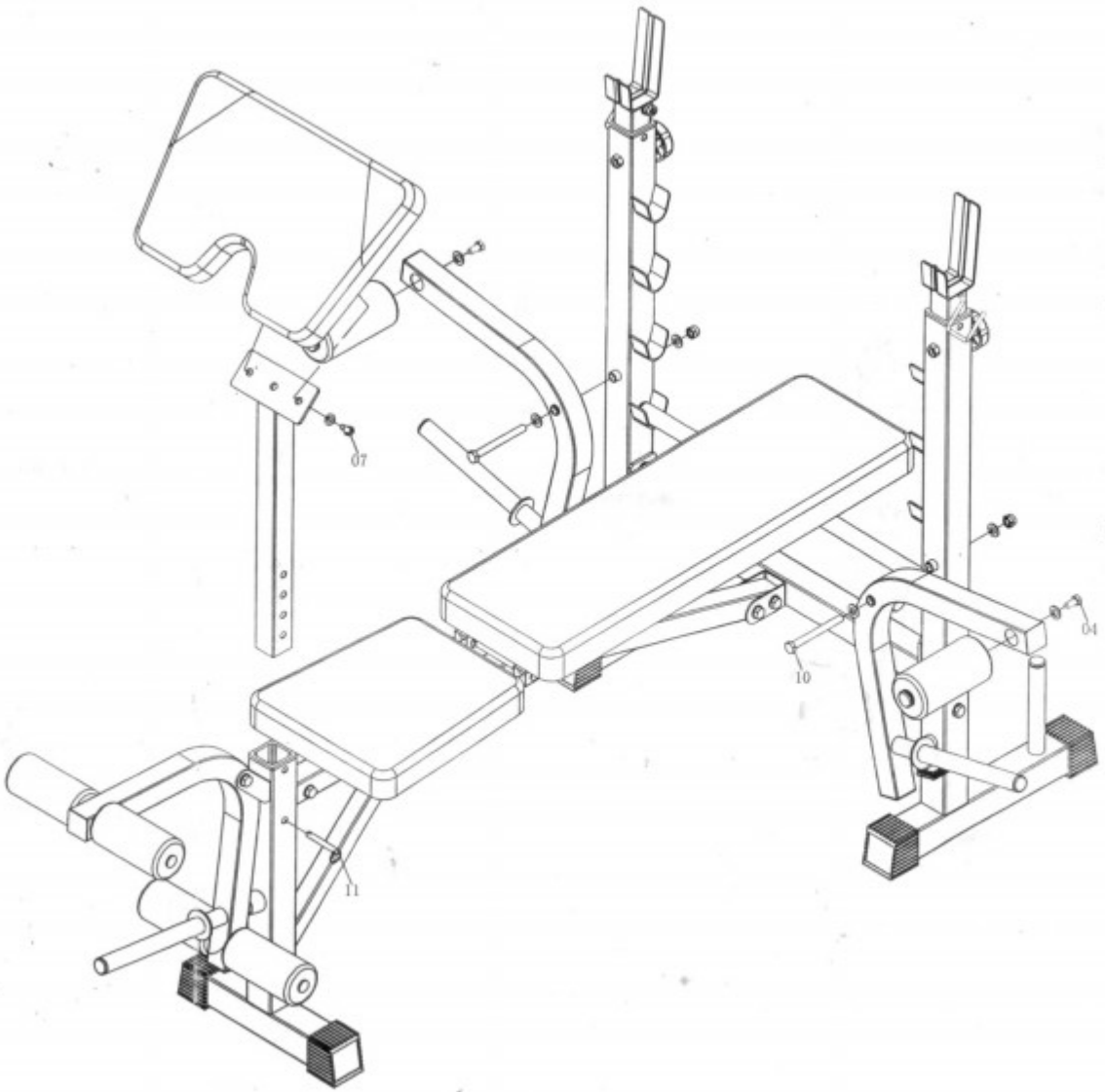

PART LIST

04.	x 2
	M10*20 bolt,washer
07.	x 2
	M8*16 bolt,washer
10.	x
	M10*120 bolt,washer,nu
11.	x 1
	M10*65 LOCK PIN